The Interferometric CartWheel

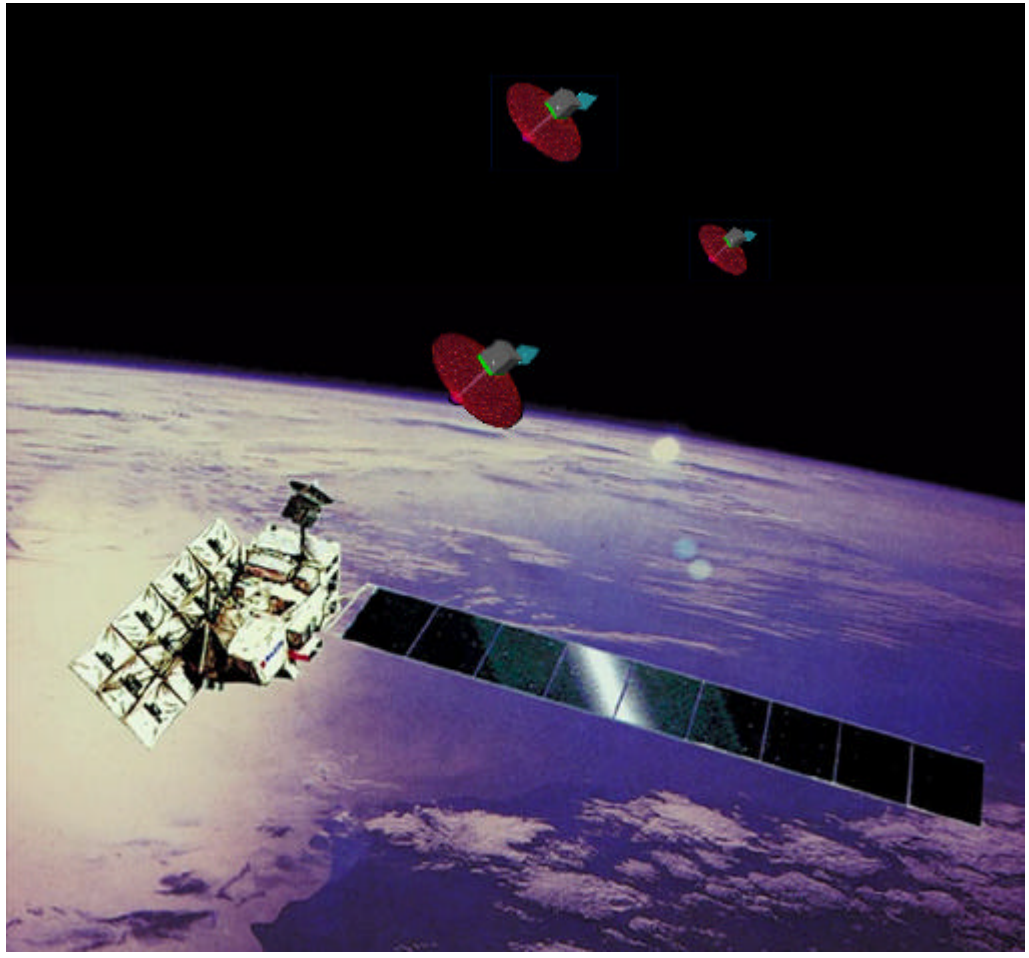

A wheel of passive radar microsatellites for upgrading existing SAR projects

D. Massonnet, P. Ultré-Guérard (DPI/EOT)
E. Thouvenot (DTS/AE/INS/IR)

SAR Interferometry (SARIn)

Principle : use viewing diversity to compute image topography by 'triangulation' method

Two measures with two antennas A1 & A2 :

- **simultaneous measures and two antennas ("single-pass")**
- **or, one antenna and non simultaneous measures ("repeat-pass")**
- **or, two antennas and non simultaneous measures ("repeat-pass")**

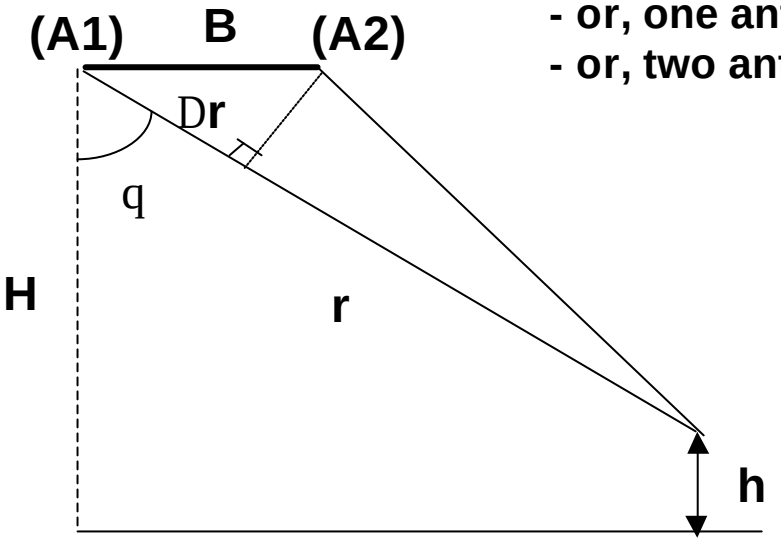

h = H - r cos(q)

r : range distance of SAR
H : high accuracy orbitography
Dr = B sin (q)
B : mechanical measure, or orbitography, or deduced from processing

The two measures create a phase difference between received signals:

f = 2p Dr / l **(twiced if repeat-pass acquisition)**

=> phases are directly related to (ambiguous) altitudes

altitude of ambiguity : $$h_{amb} = \frac{l\, r \sin q}{2B_{\perp}}$$

SAR Interferometry (SARIn)

Interferogram made of franges

Potential issue : 'unwrapping' phase due to phase ambiguity (modulo p)

May require an input DEM

Applications :

- **single pass :**
  - **DEM**
- **repeat pass :**
  - **environment monitoring (earthquakes, volcanos,...)**
  - **limitations due to temporal decorrelattion (vegetation, wind, water, troposphere, ionosphere...)**

Examples of applications

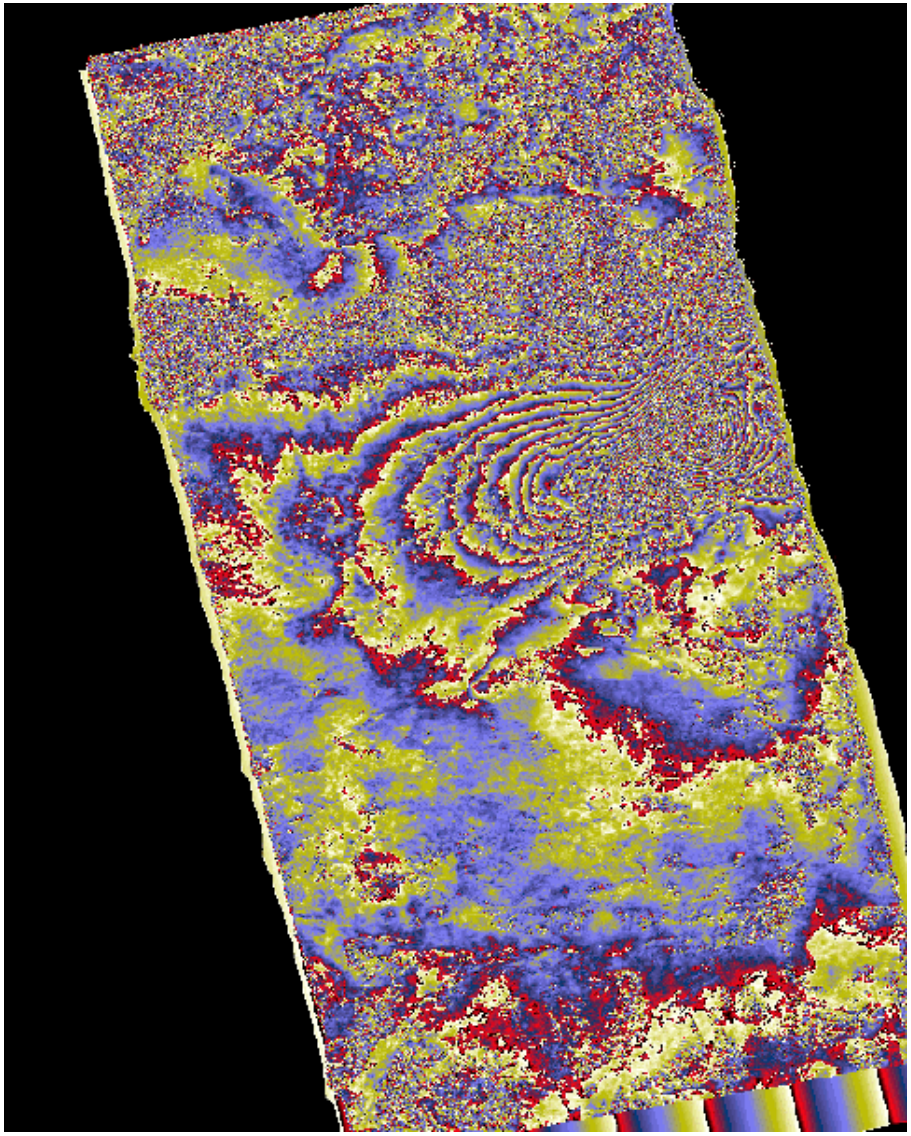

Landers earthquake (California)
(28 mm interfrange)

105 days between acquisitions

Differential interferometry

Examples of applications

Relaxation of Etna volcano

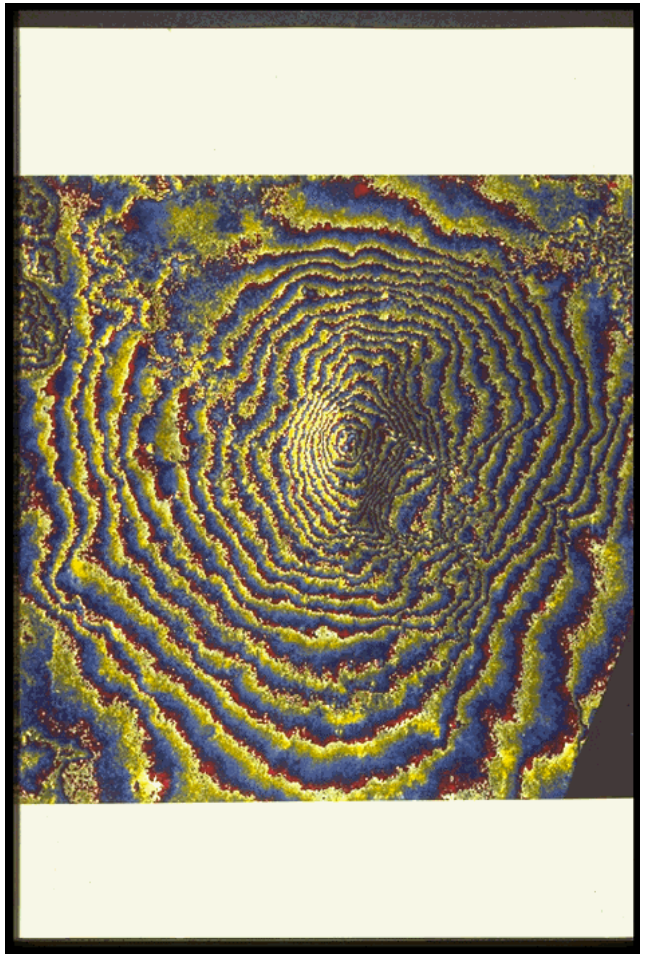

Topography image : 1 frange = 250 m

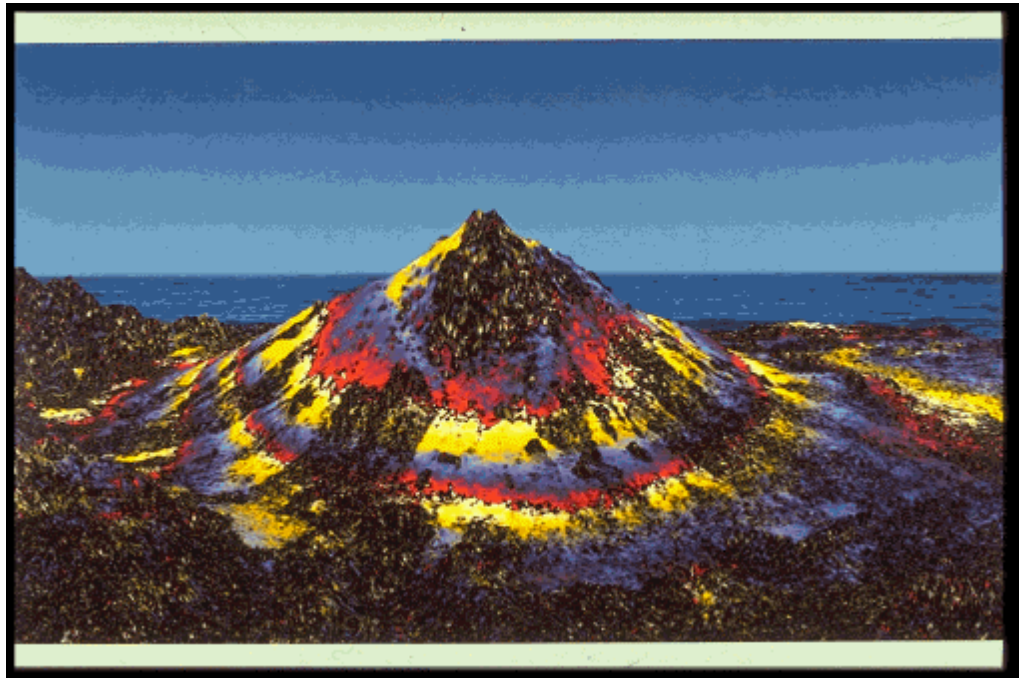

Differential topography (difference of interferograms)
1 frange = 28 mm

(18 months between two images)

Interferometric Cartwheel

-Concept (CNES patent) : 3 (or more) passive radar micro-satellites flying in formation with a conventional SAR.

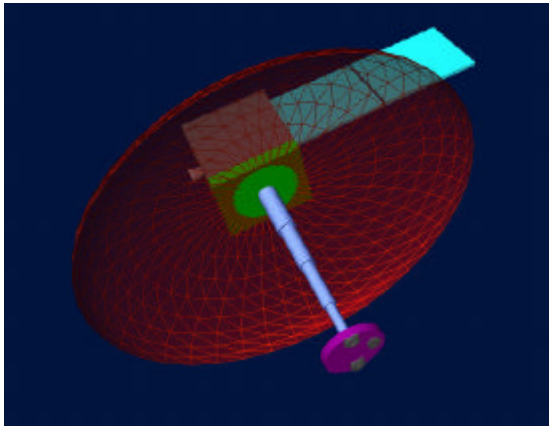

(x 3) 1m

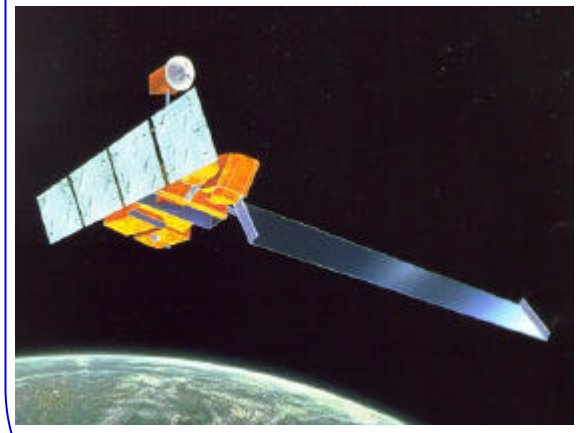

10 m

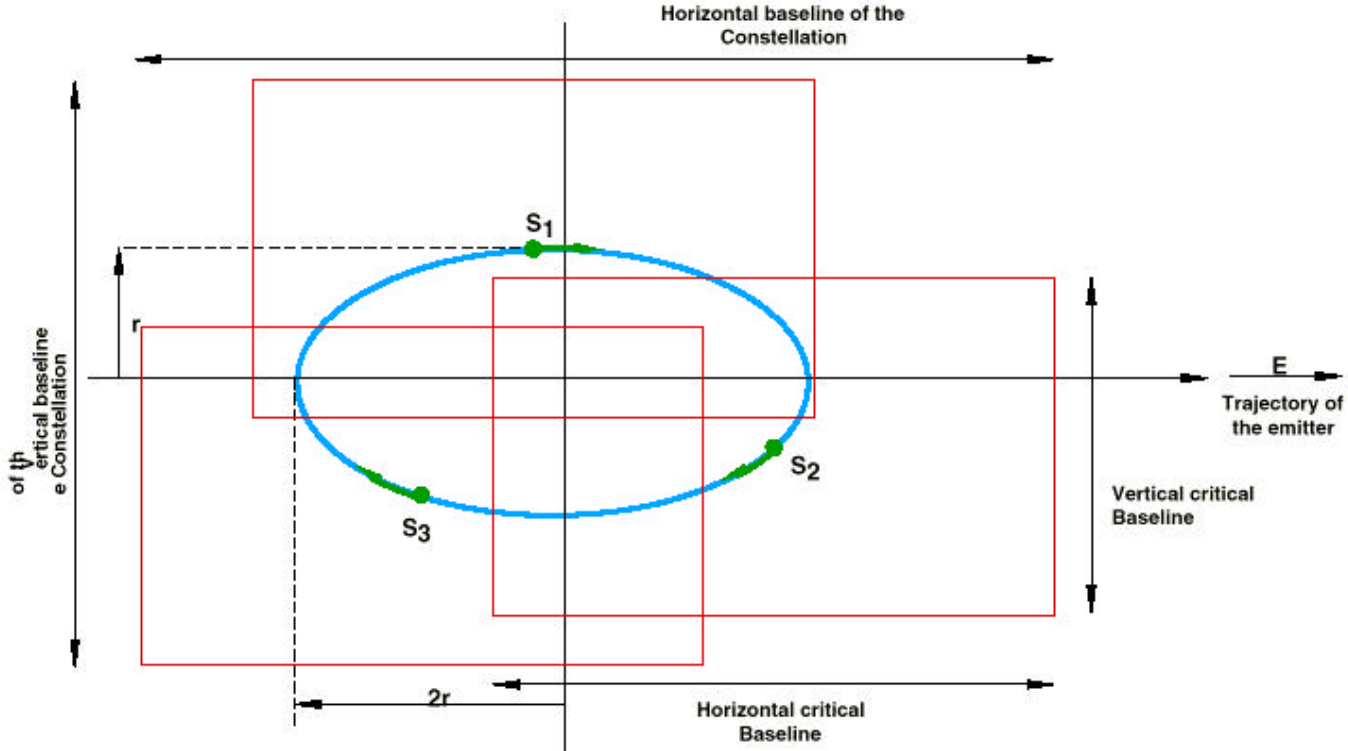

microsats have the same orbit as the emitter except:

-slightly different eccentricity (same one for 3 microsats)

-different arguments of perigee

=> the microsatellites are rolling along a virtual ellipse, creating very stable horizontal and vertical baselines (less than 8% variation during the orbit)

Coherent combination of radar images are related to horizontal (along-track) and vertical (across-track) critical baselines

Mission rationale

- Cheap solution for implementing various applications of coherent combinations of radar images

- Ideal complement to any existing or planned SAR system (L-, C- or X-band)

- Main application : DEM

  Computation of Digital Elevation Model use the across-track separation ot the microsats. Typical performance due to the several-kilometer baseline is a metric capability in vertical resolution. This performance supposes a preliminary topographic correction from a 30-m DEM (such as the global DEM produced by SRTM)

- Secondary application : super-resolution

  Super-resolution in range and in azimuth may be obtained from super-synthesis of radar data using the diversity of point of view within the pixel. Performance is governed by the proportion of the baselines to the critical baselines. Resolutions may be improved by a factor up to 2 (with 3 microsats) with respect to the emitter.

  Super-resolution is specially interesting in L-band for which international frequency regulations limit allocated bandwidth.

- Secondary application : mapping of ocean currents

  Mapping of ocean currents is obtained through along-track interferometry, using time diversity created by the distance between the two along-track microsatellites (typically one to a few seconds)

Image quality

Image quality considerations for ICW mainly address two categories of issues:

• Compliance with microsatellite interfaces and low-cost objective imply using an antenna smaller than the emitter SAR antenna, and probably circular. Consequences on image quality deal with:

- signal to noise ratio : the loss due to antenna surface (typically 8 to 10 dB with respect to the emitter) may be compensated by the surface of the DEM pixel (typically 20mx20m) which is much larger than the 1-look resolution of the SAR.

- ambiguity level: the antenna height may be about the same as the emitter (except in L-band), whereas the antenna length will be much smaller than the emitter. It has been shown than the ICW ambiguity ratio in azimuth would be about 10 to 14 dB higher than the conventional SAR ambiguity ratio.
However, the ambiguous targets will not contribute in a coherent way to the combination of images from the receivers. Thus, they will only behave as an additional source of noise, which is considered acceptable for the DEM production.

• Frequency drifts of Local Oscillators between the 3 microsatellites have to be kept under a critical value (that corresponds to a wavelength shift between the receivers during image acquisition time). Then the LO specifications exceed the ones of the emitter, while remaining compatible with off-the-shelf components (USOs).

All other specifications (platform pointing, calibration, quantification) may be degraded without significant impact on DEM quality.

System considerations

- the system is not complex

- access to orbit is done with a (dedicated) single launch. Creating and maintaining the wheel just imply using propulsion option on microsatellite, without any modification.

-the wheel is first set to a few percentage (5 to 10%) of the critical baselines to perform the DEM mission. For specific needs, the wheel may be configured with a totally different shape or size.

-the wheel is kept about 50 to 100 km ahead of the emitter to prevent any risk induced by an eventual loss of control of a microsatellite.

-typical scenario of an orbit is:

- 2 to 3 minutes are dedicated to image acquisition
- image is stored (after a BAQ 8/2) into a 20 Gbit memory
- 8 to 10 minutes are dedicated to TM through an X-Band channel (developed for the DEMETER mission)
- stand-by mode (solar pointing of the SA) is set for the remaining part of the orbit (about 80 minutes)

-this scenario imply a knowledge of the SAR's plan of operations, that authorizes to point the microsatellite to the area illuminated by the emitter before acquisition

-with these considerations, the whole coverage of the terrestrial surfaces above sea level will be done within an 18-month period

Payload design

Design is much simpler than for a conventional SAR :

- **passive antenna**
- **passive instrument**

The critical subsystem is the antenna

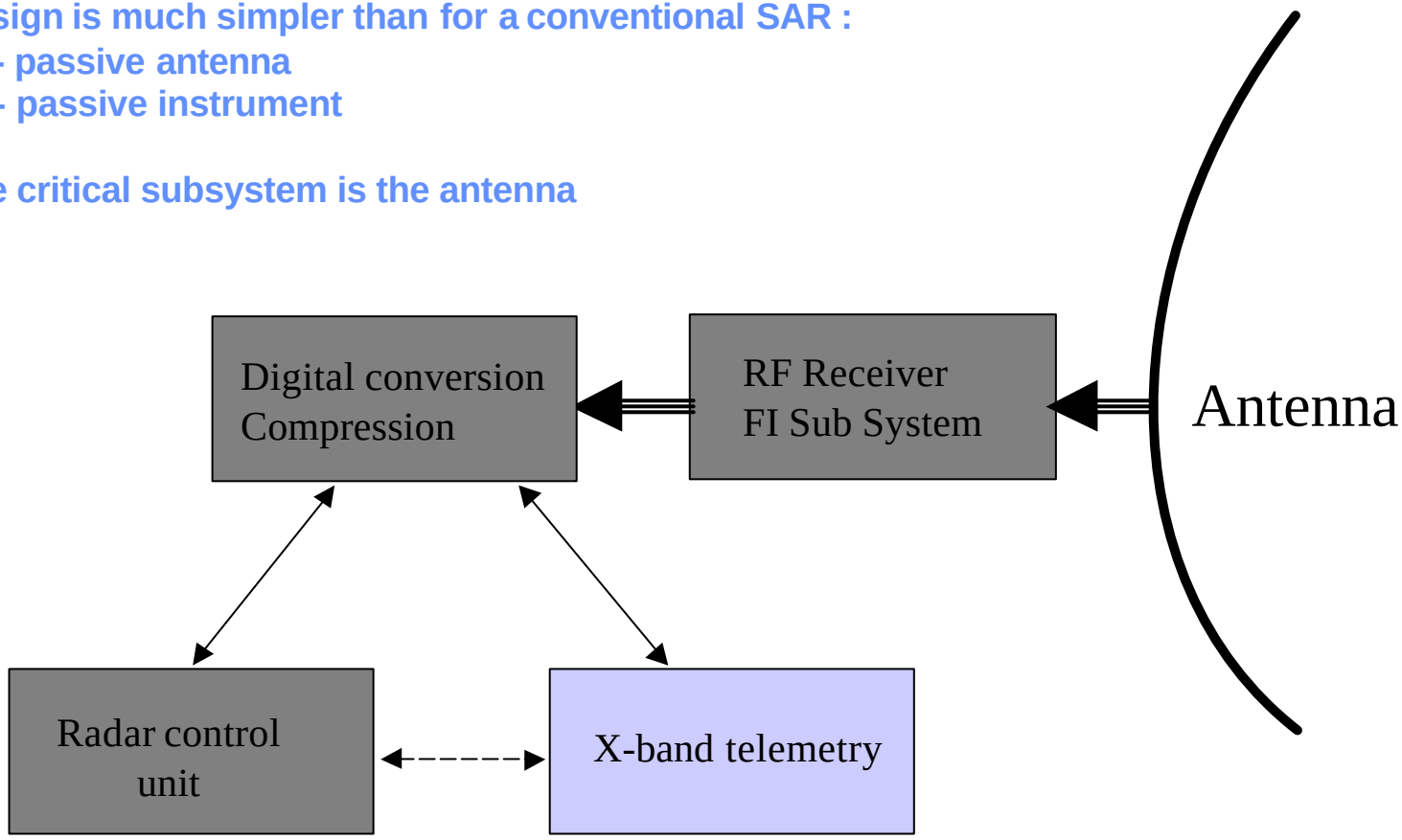

Examples of considered antennas (1/2)

- nominal concept : 'WRAP-RIB' (Lockheed)

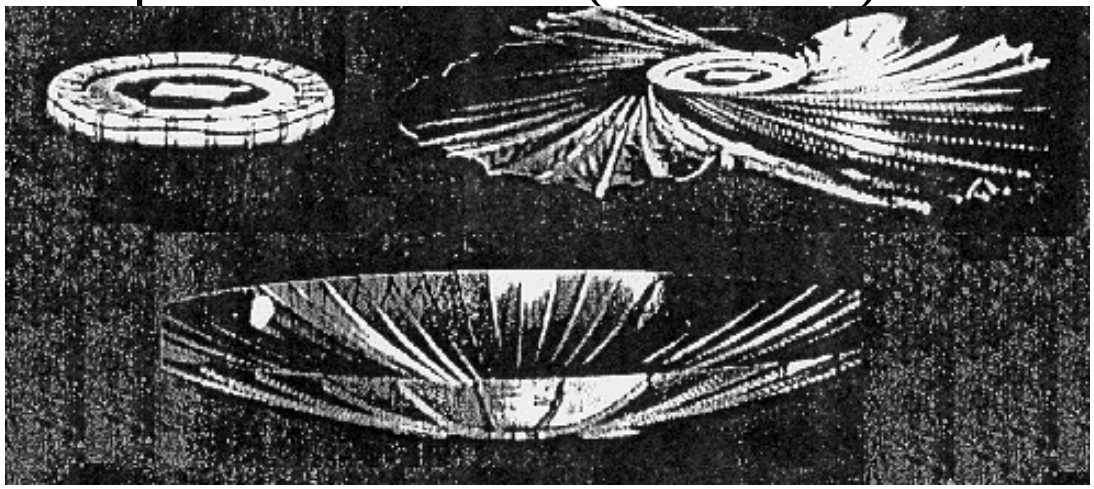

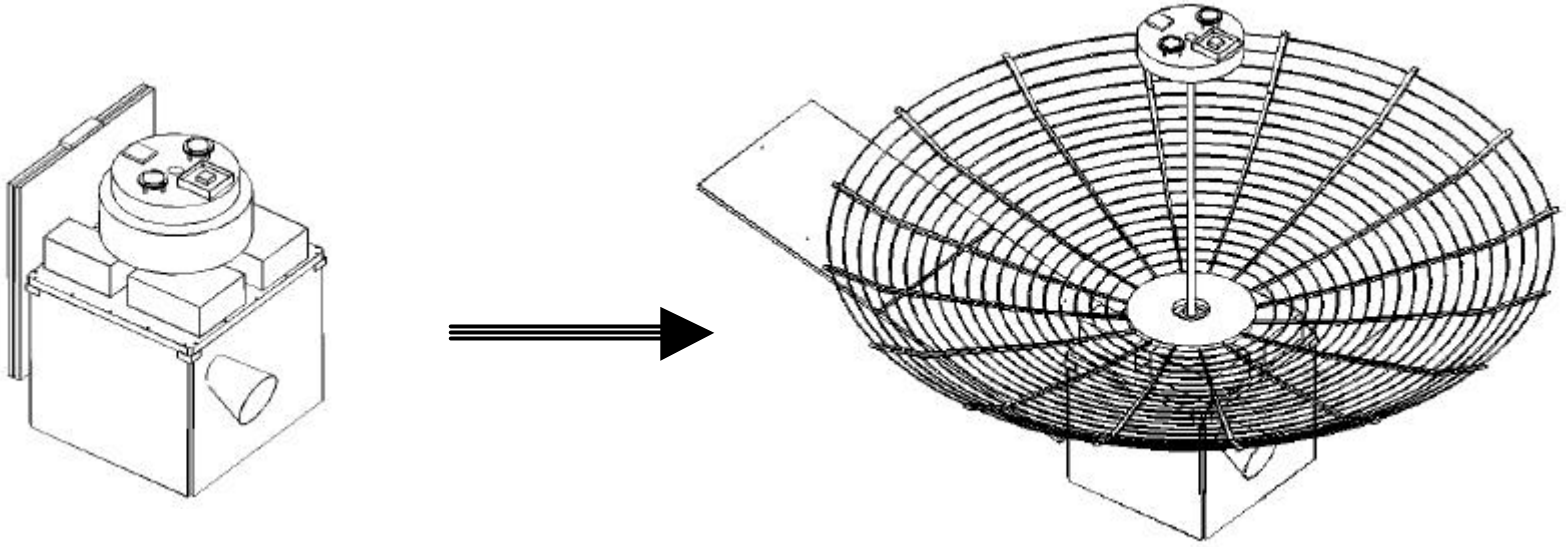

Examples of considered antennas (2/2)

- alternative concept : 'umbrella'

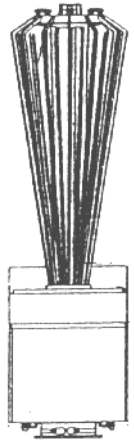

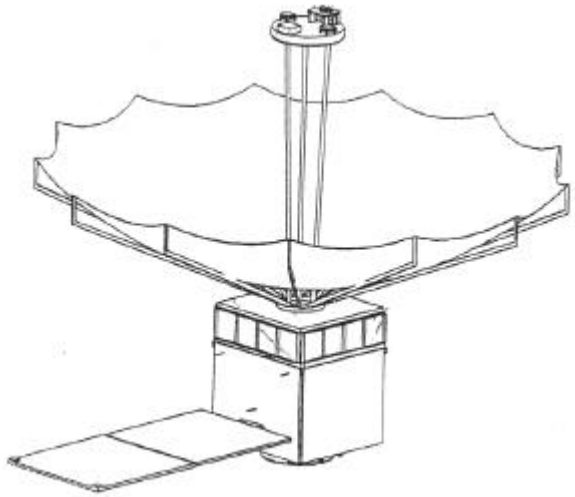

- alternative concept : 'unfurlable offset'

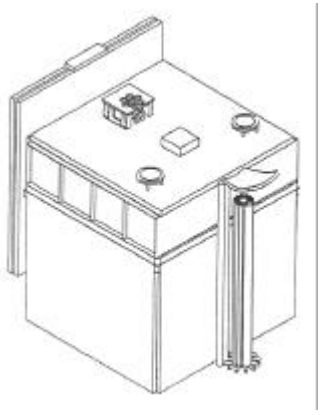

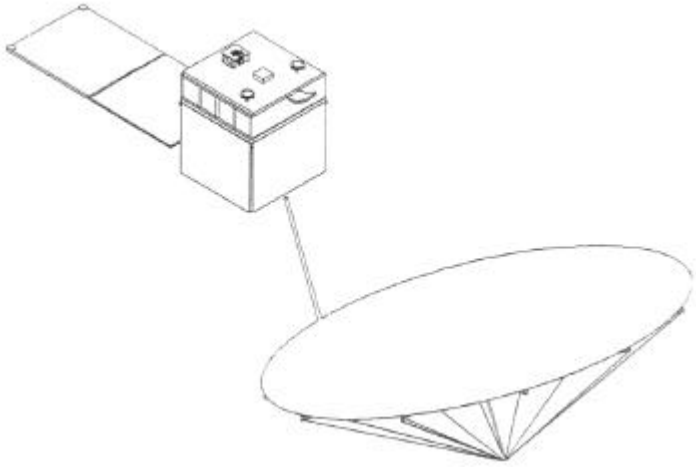

System budget and performance

Results obtained from ASPI feasibility study

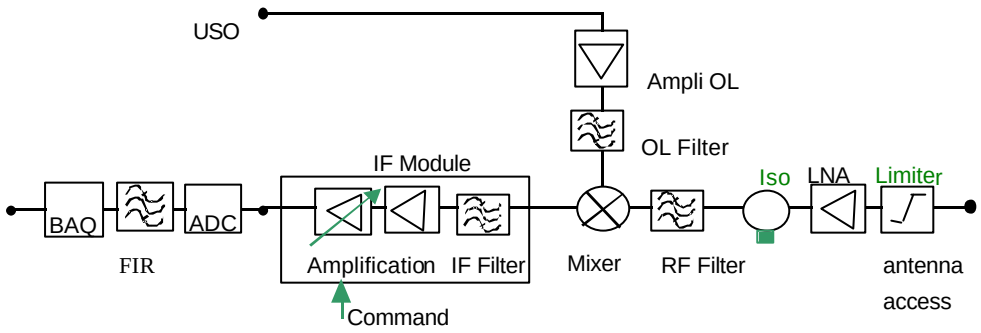

Receiver architecture (for L- and C-band)

Antenna size		2.4 m diameter
Mast length		1.2 m
Antenna gain (RF losses included)		~26 dBi
Instrument data rate		~160 Mb/s
Memory size		20 Gbits
Telemetry data rate		Up to 50 Mb/s
Mass	Antenna + mast	16 kg
	Receiver	12 kg
	Telemetry unit	2 kg
Consumption	Imaging mode	50 W
	Telemetry mode	50 W
	Stand-by mode	20 W
Mission		2 years minimum

Preliminary instrument parameters

Architecture may be common for a L- or a C-band Interferometric Cartwheel whatever the bandwidth (15 to 30 MHz), with only a dedicated RF receiver

X-band ICW may be different due to higher bandwidth (> 30 MHz)

Status

•Rationale for a X-band mission made by CNES for DGA

•Payload feasibility study currently at ASPI for CNES
- bande L (ALOS)
- bande C (Envisat, ...)
- bande X
+ specific aspects dedicated to ALOS

• Satellite feasibility study planned for June 2000

=> Planning :
- end of phase A : November 2000
- begin phase B : February 2001
- (launch of ENVISAT : 05/2001)
- (launch of ALOS : 09/2002)
- launch of ICW : 2004/2005 (L- or C-band), or from 2005 (X-band)